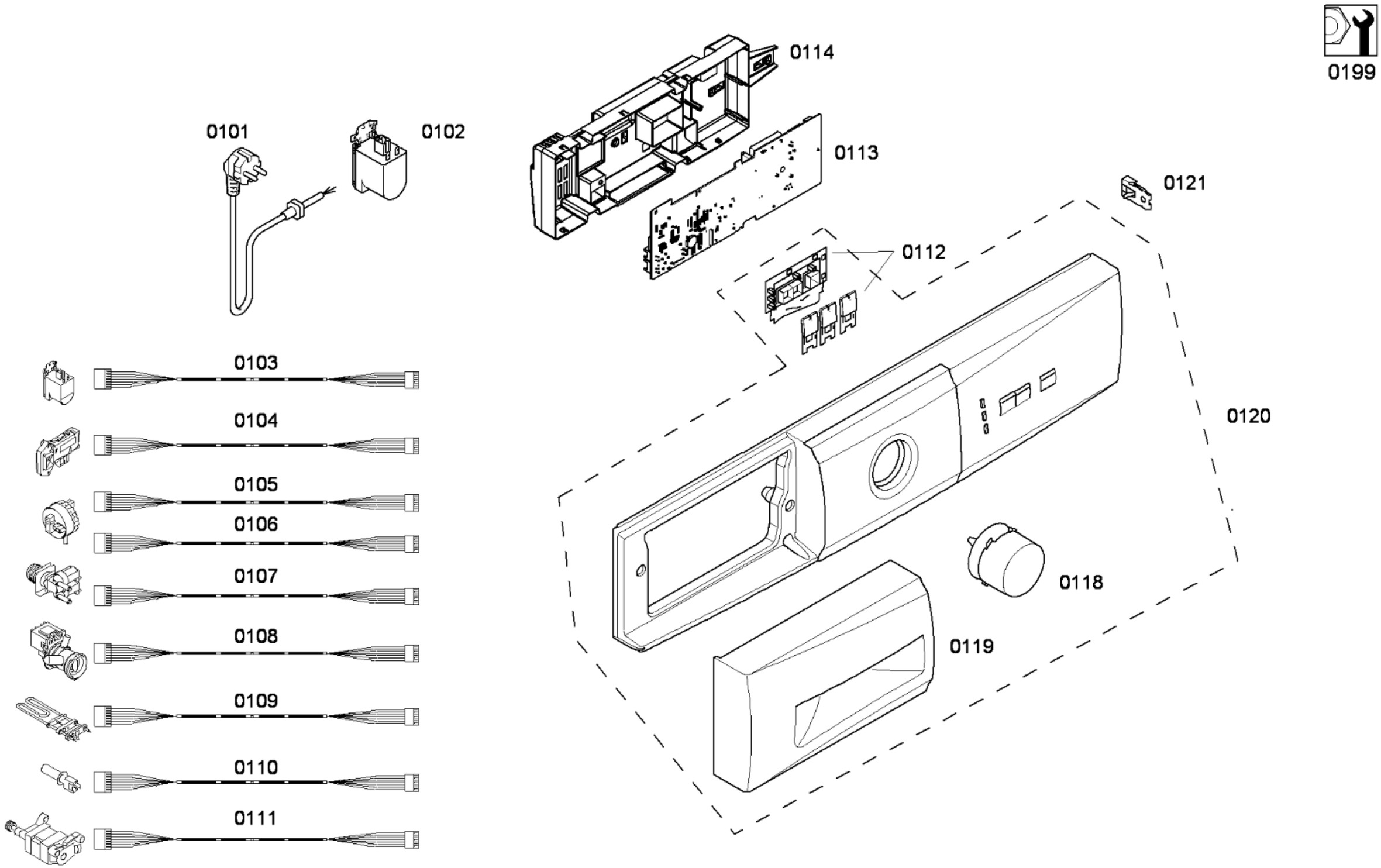

583000001 46809 aet 000 a 1/4

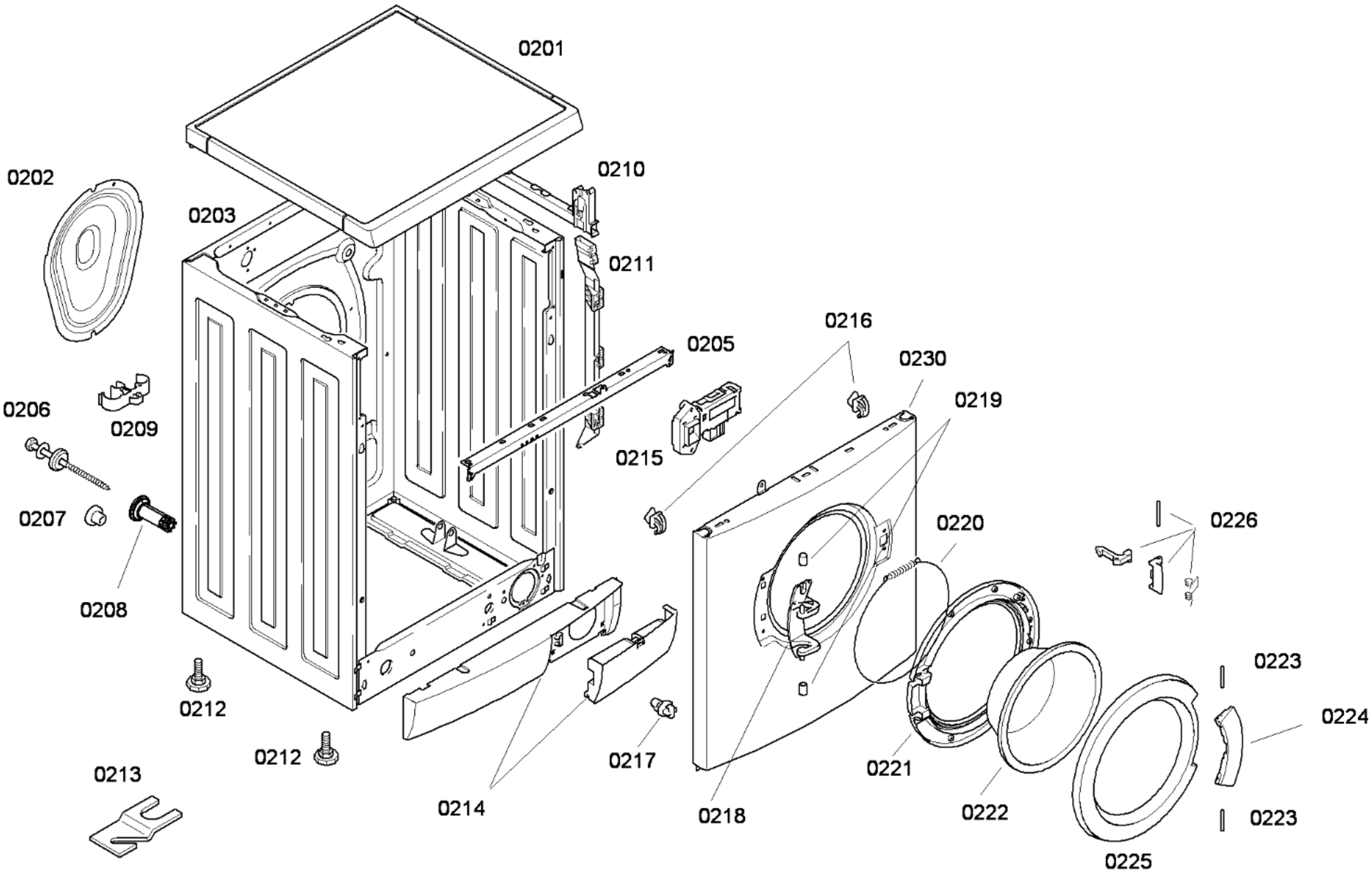

583000001 46809 aet 000 a 2/4

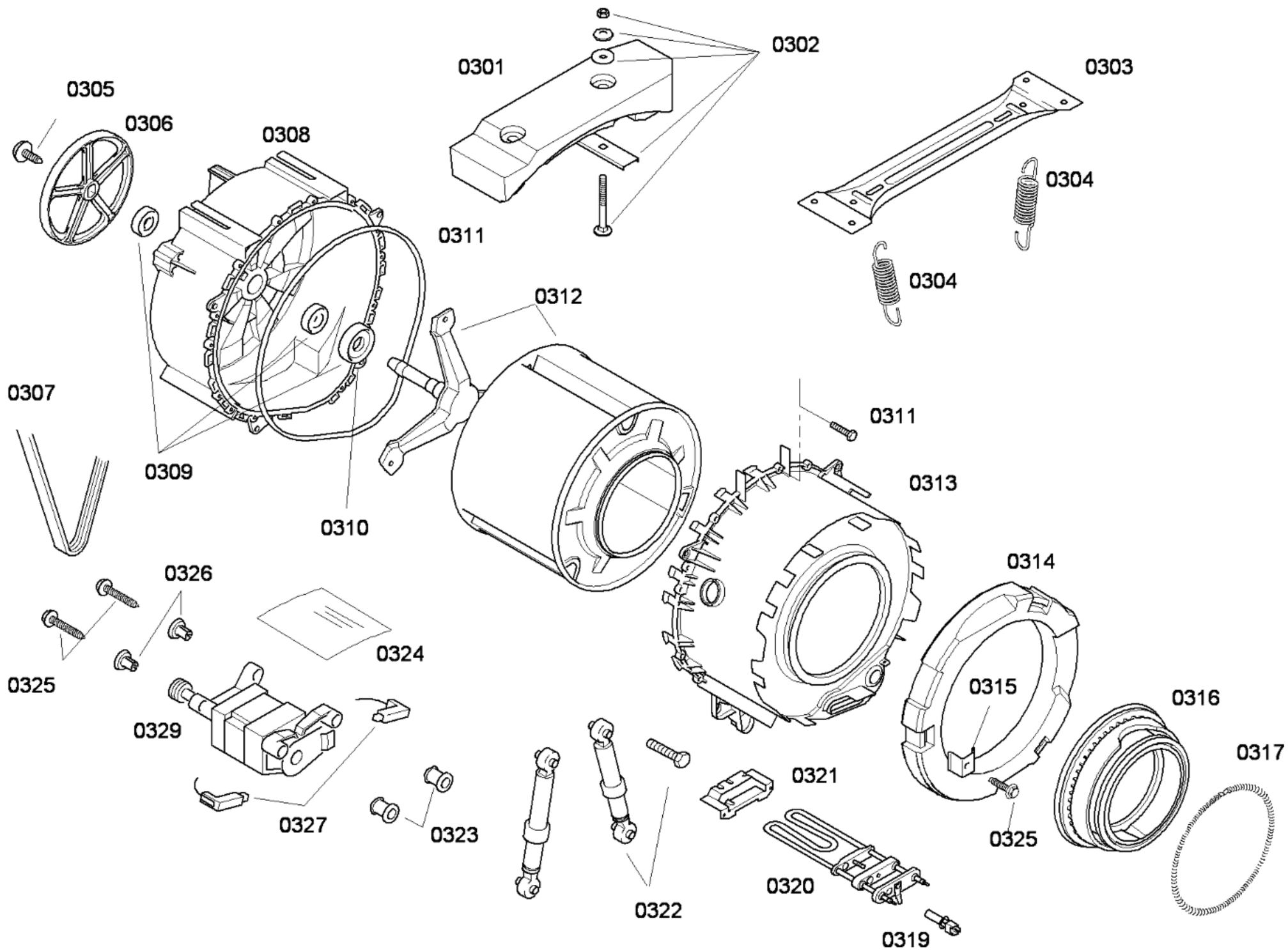

583000001 46809 aet 000 a 3/4

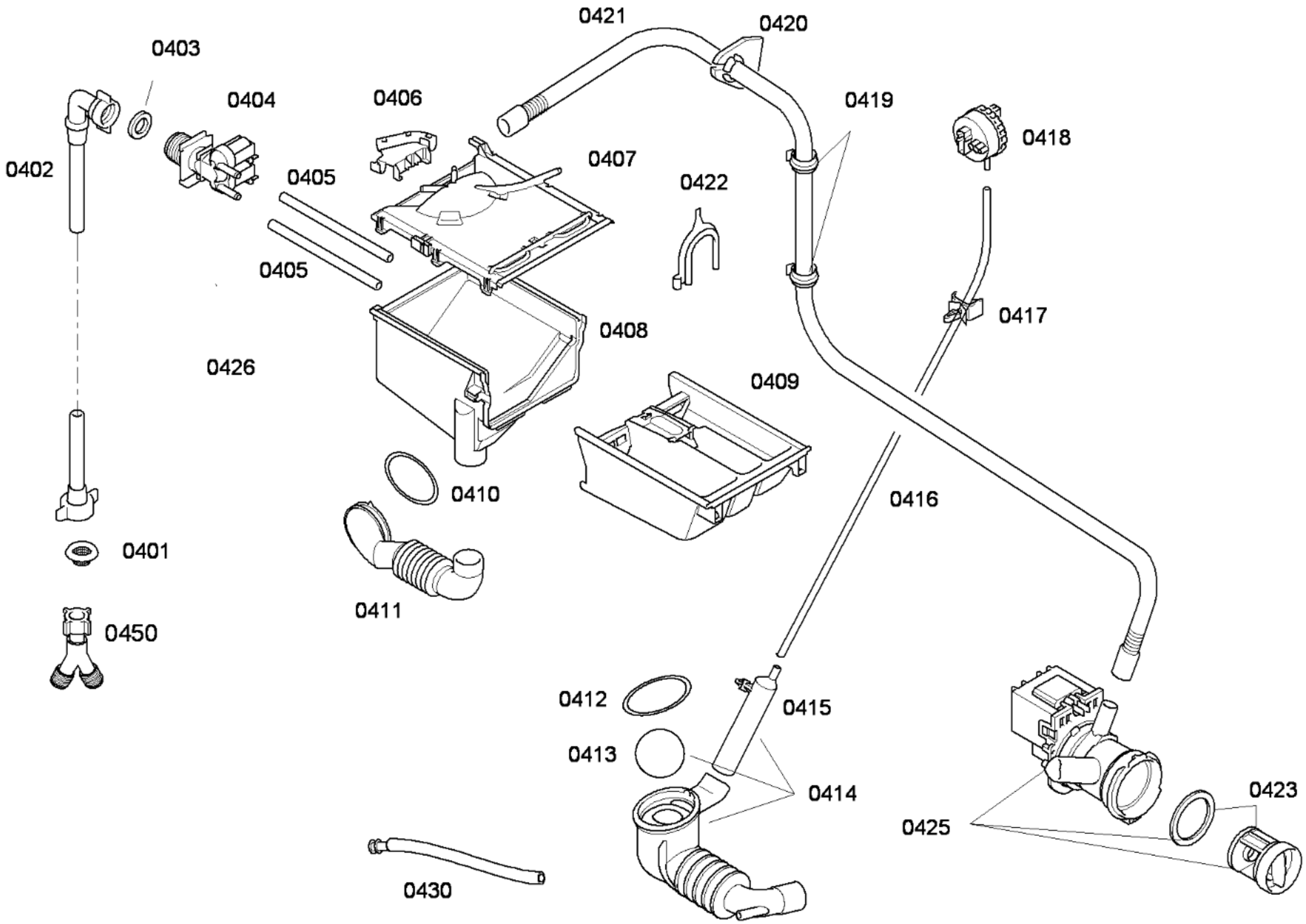

583000001 46809 aet 000 a 4/4