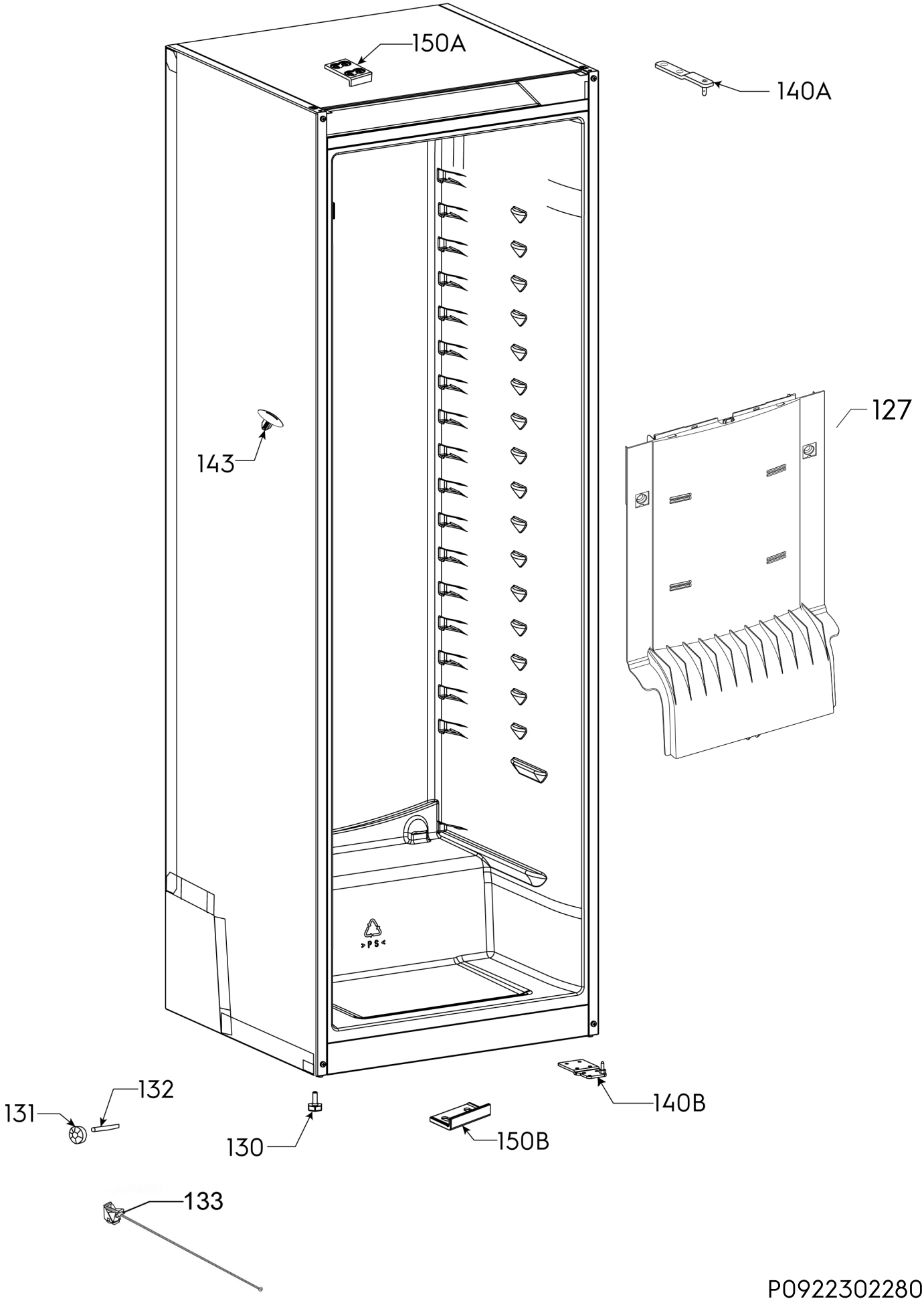

P09223022808