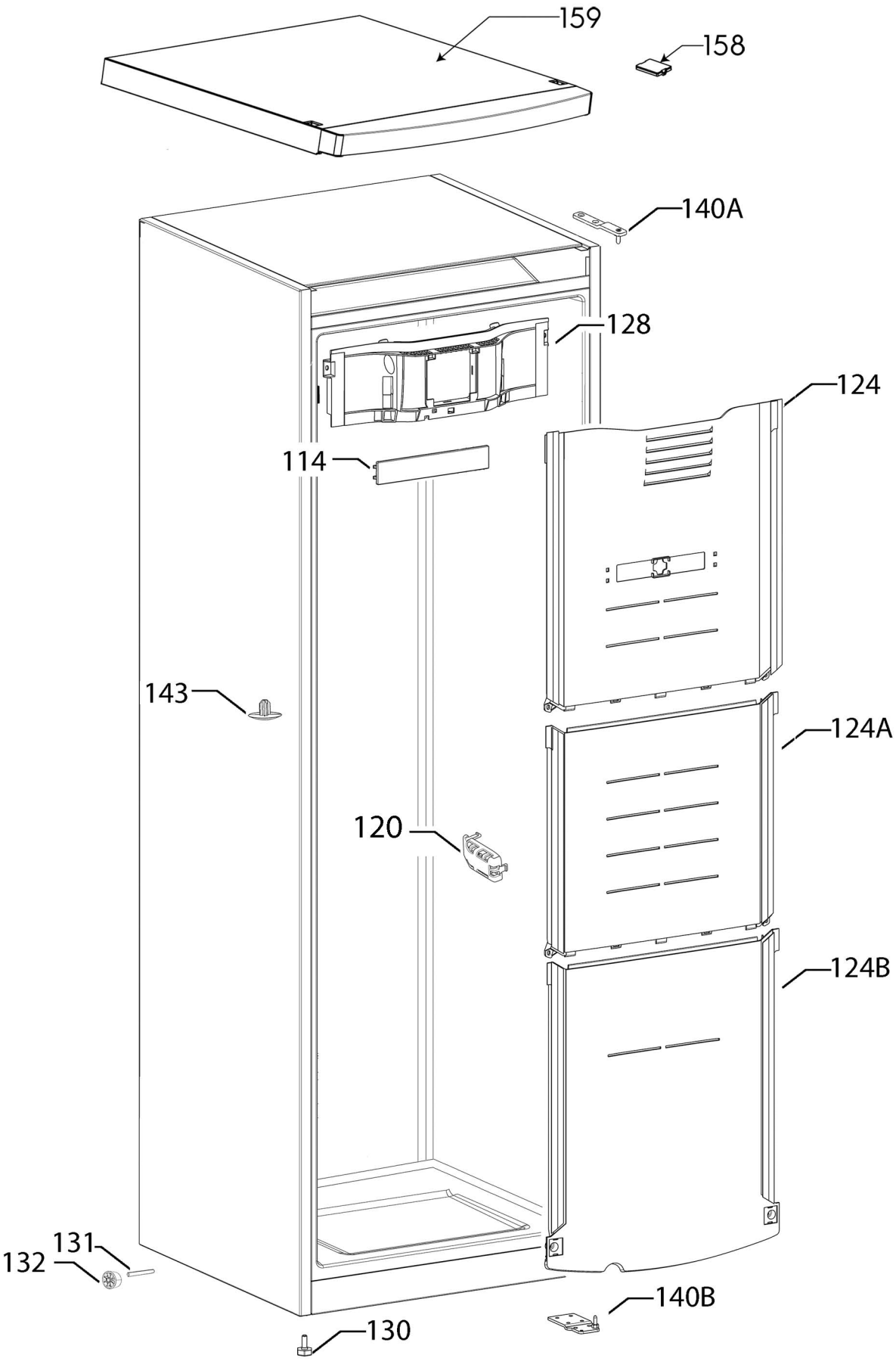

P09233047970