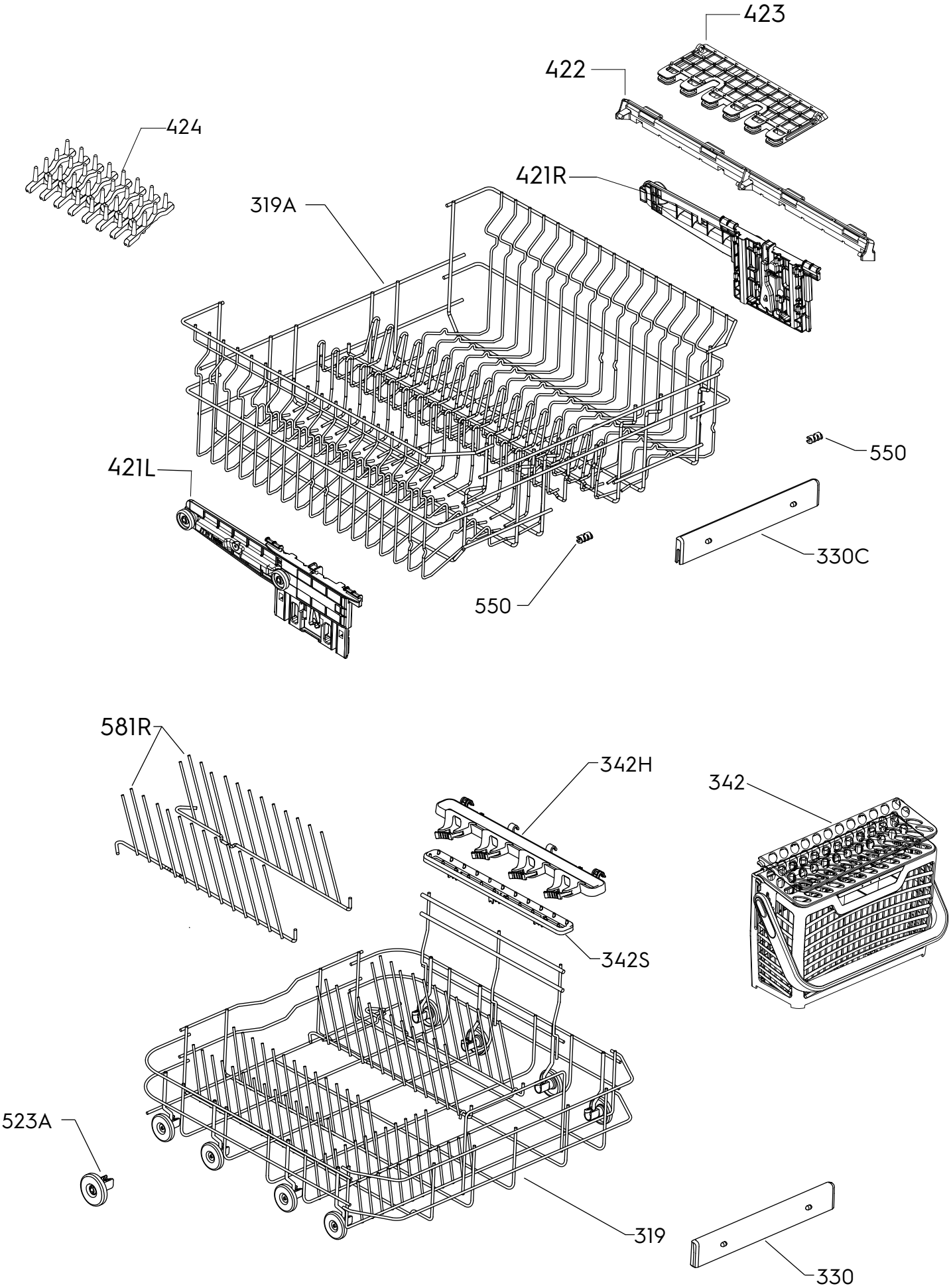

P09113254616