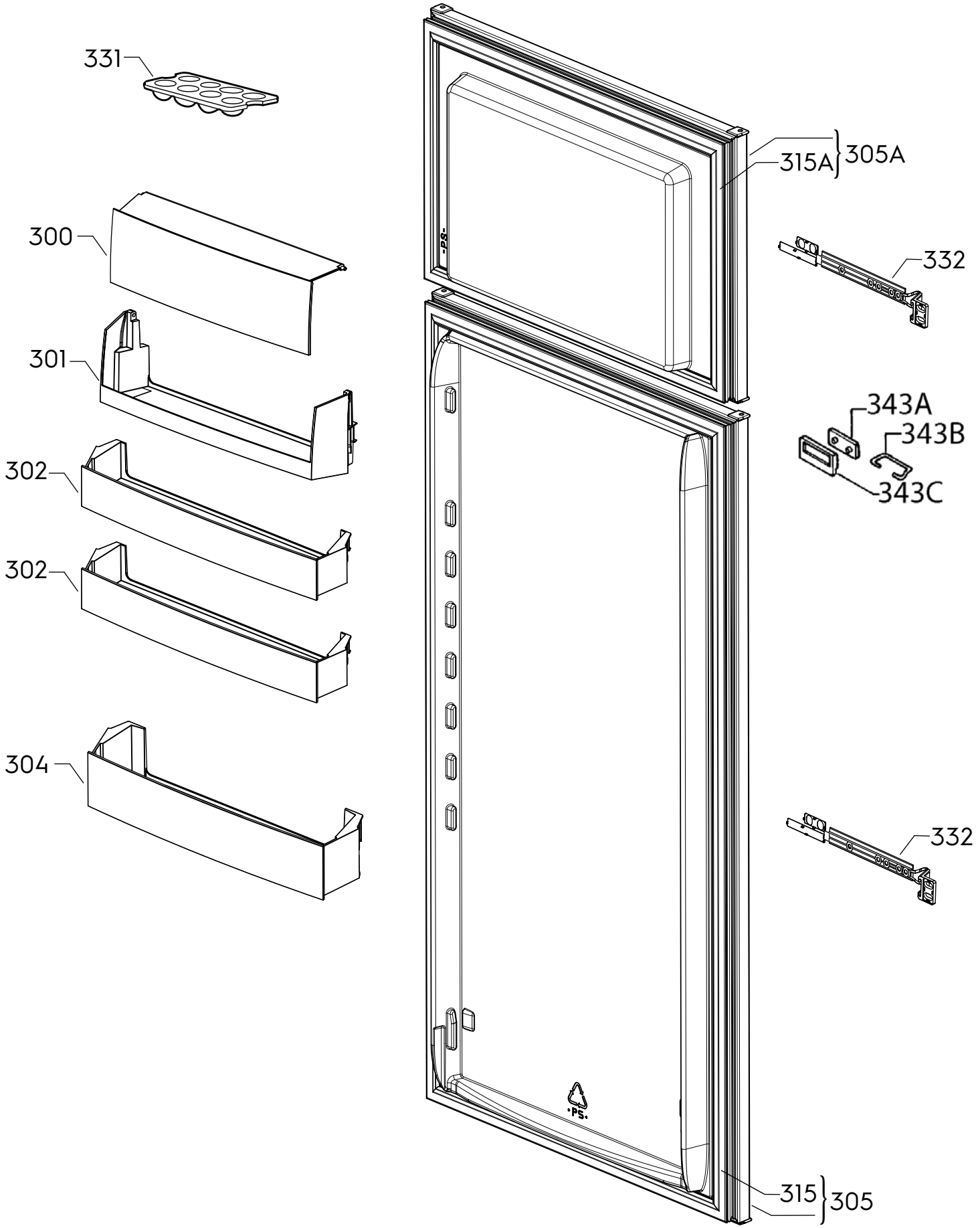

P09253076548