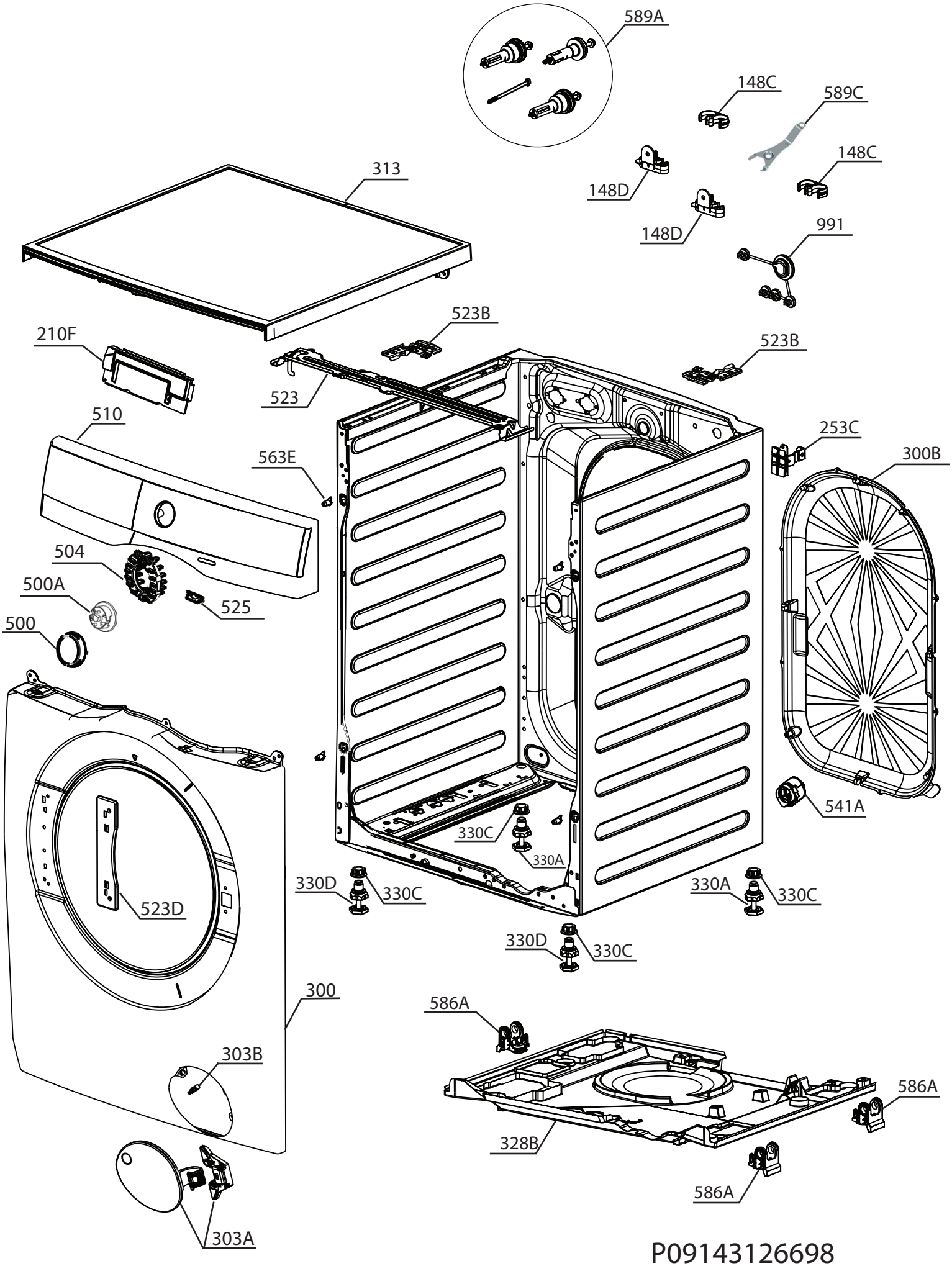

P09143126698