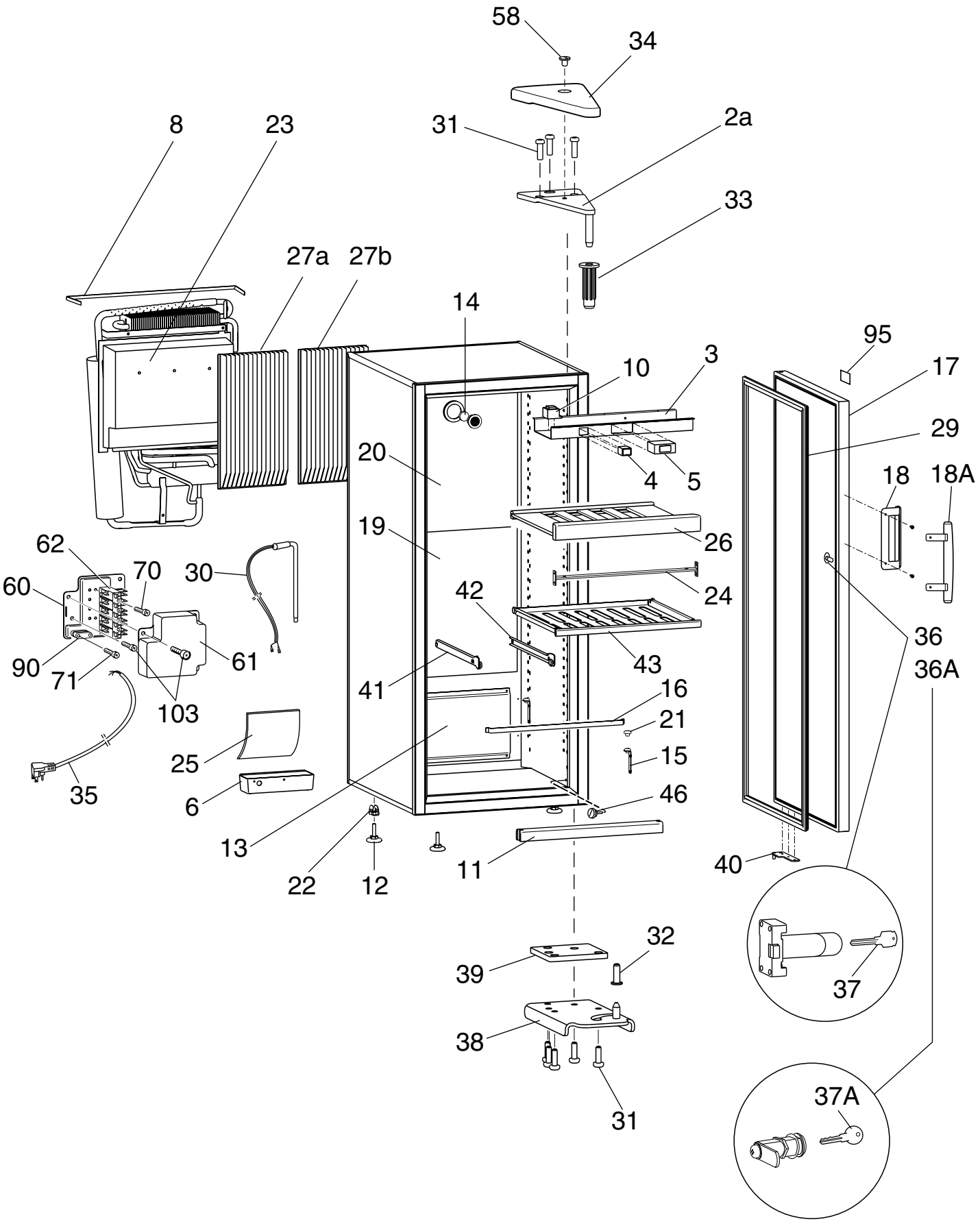

NCVKA2056374