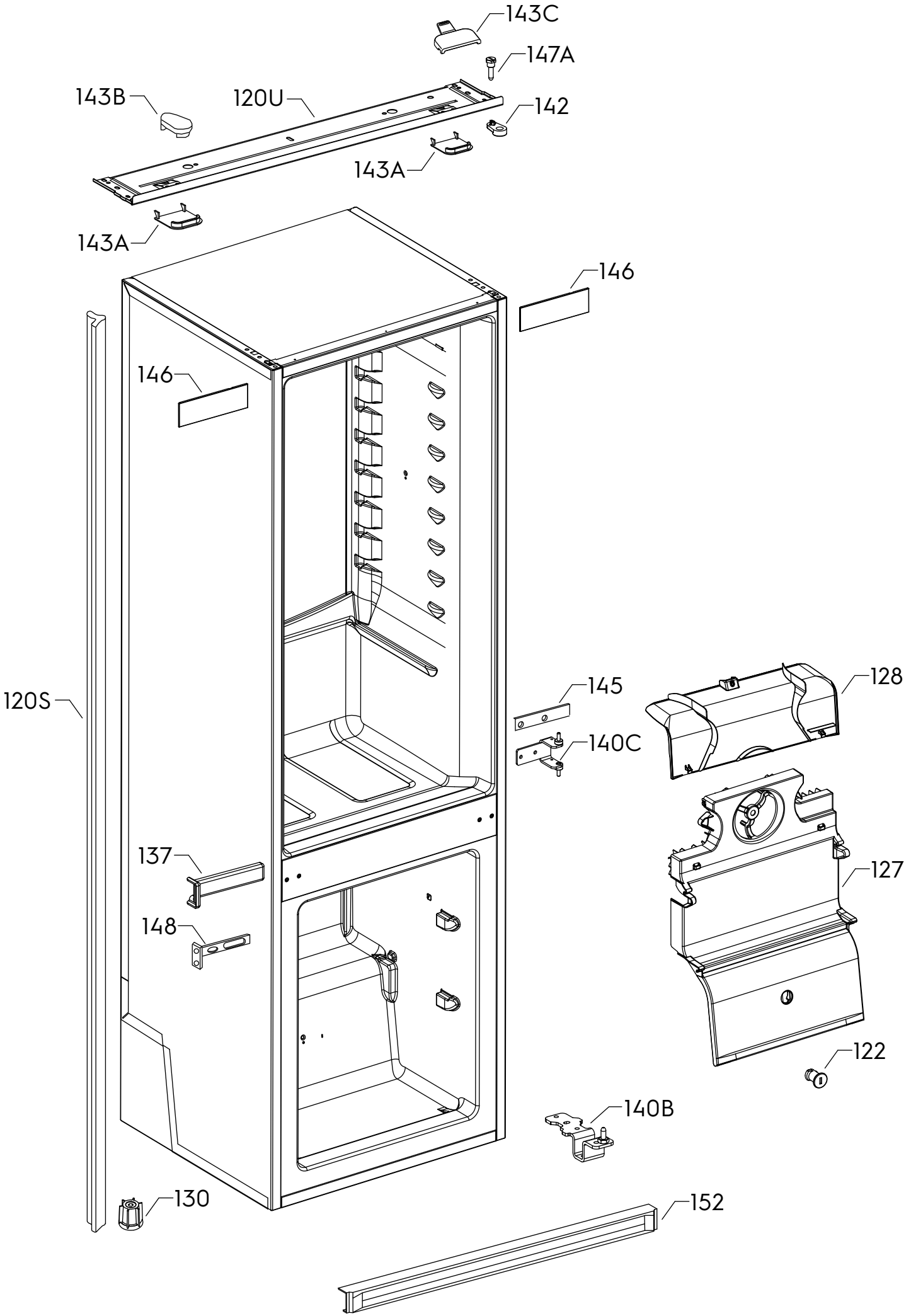

P09253089969