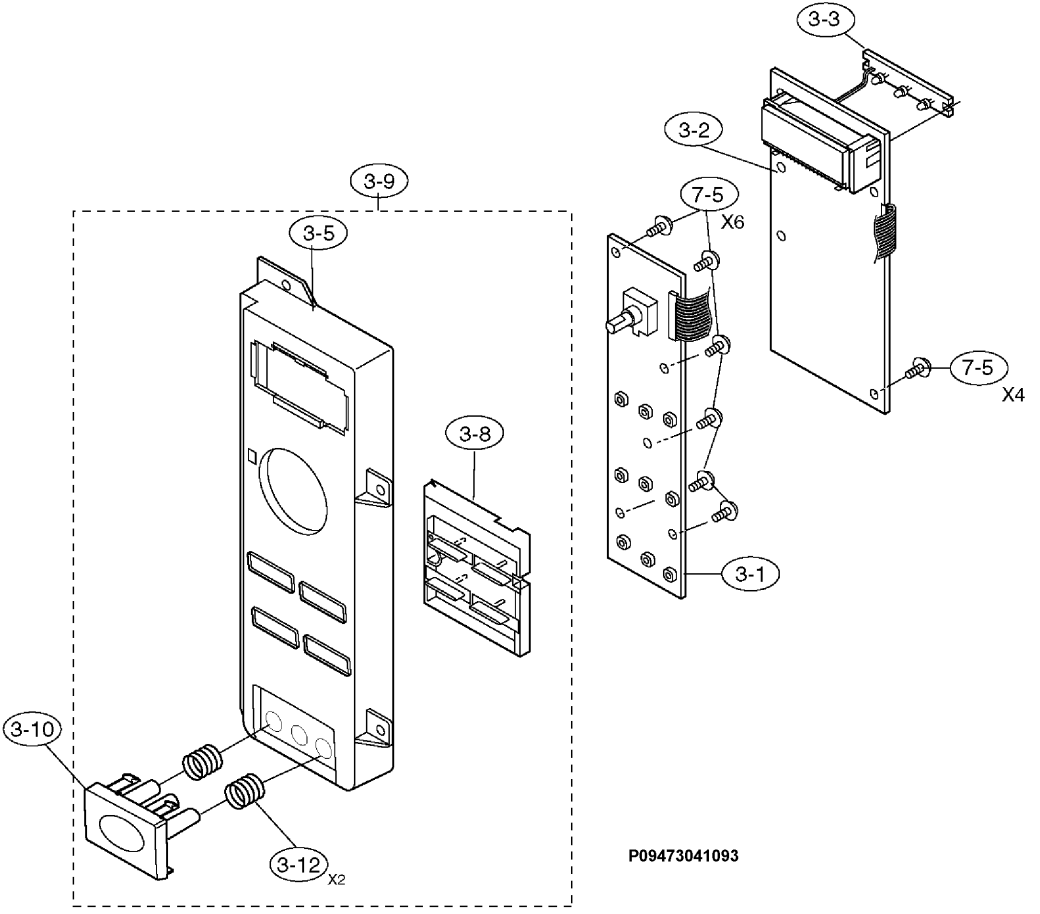
3-3
3-2
3-9
7-5
X6
3-5
7-5
X4
3-8
3-1
3-10
3-12
X2
P09473041093