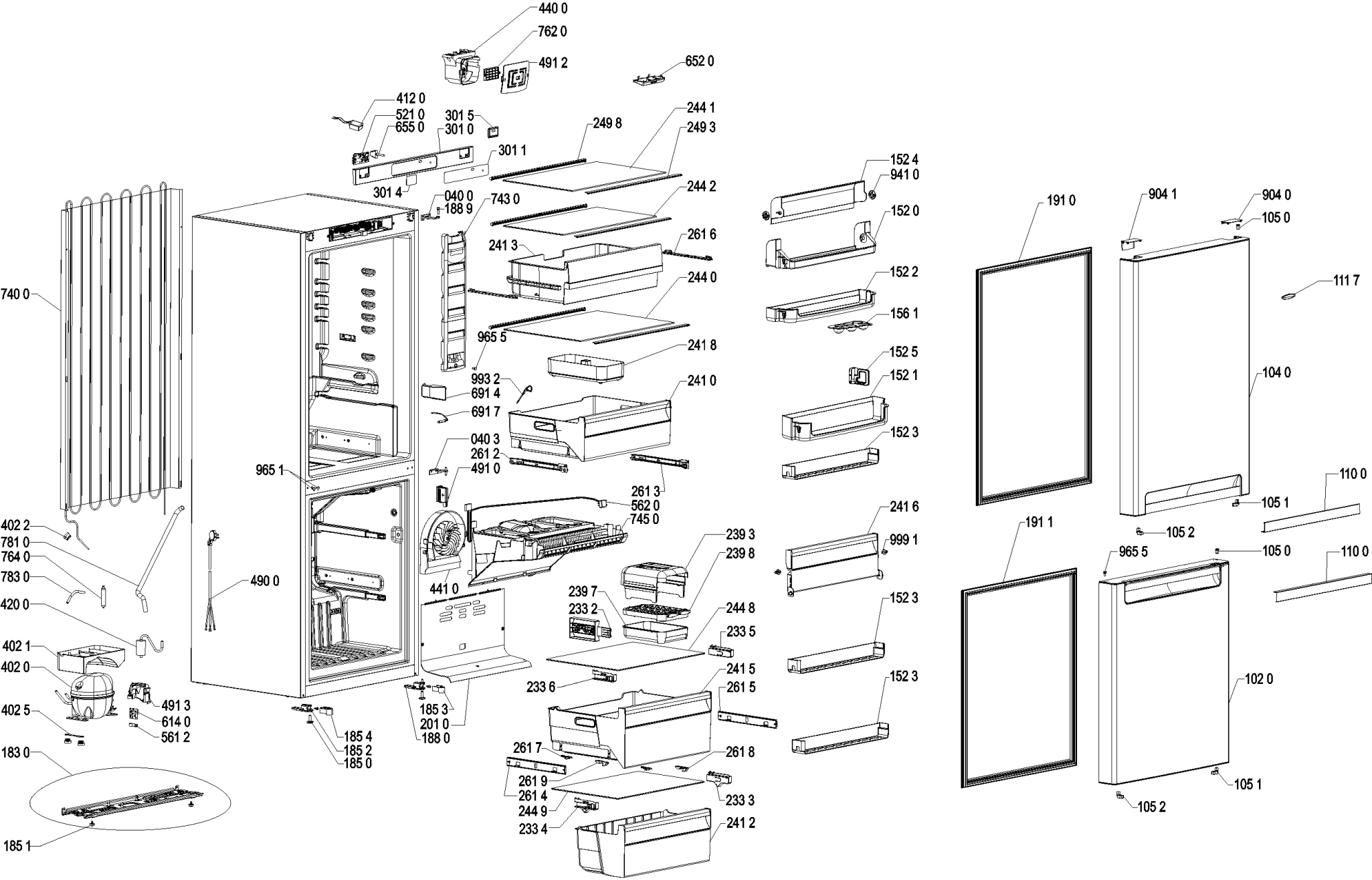

4000 105 99769