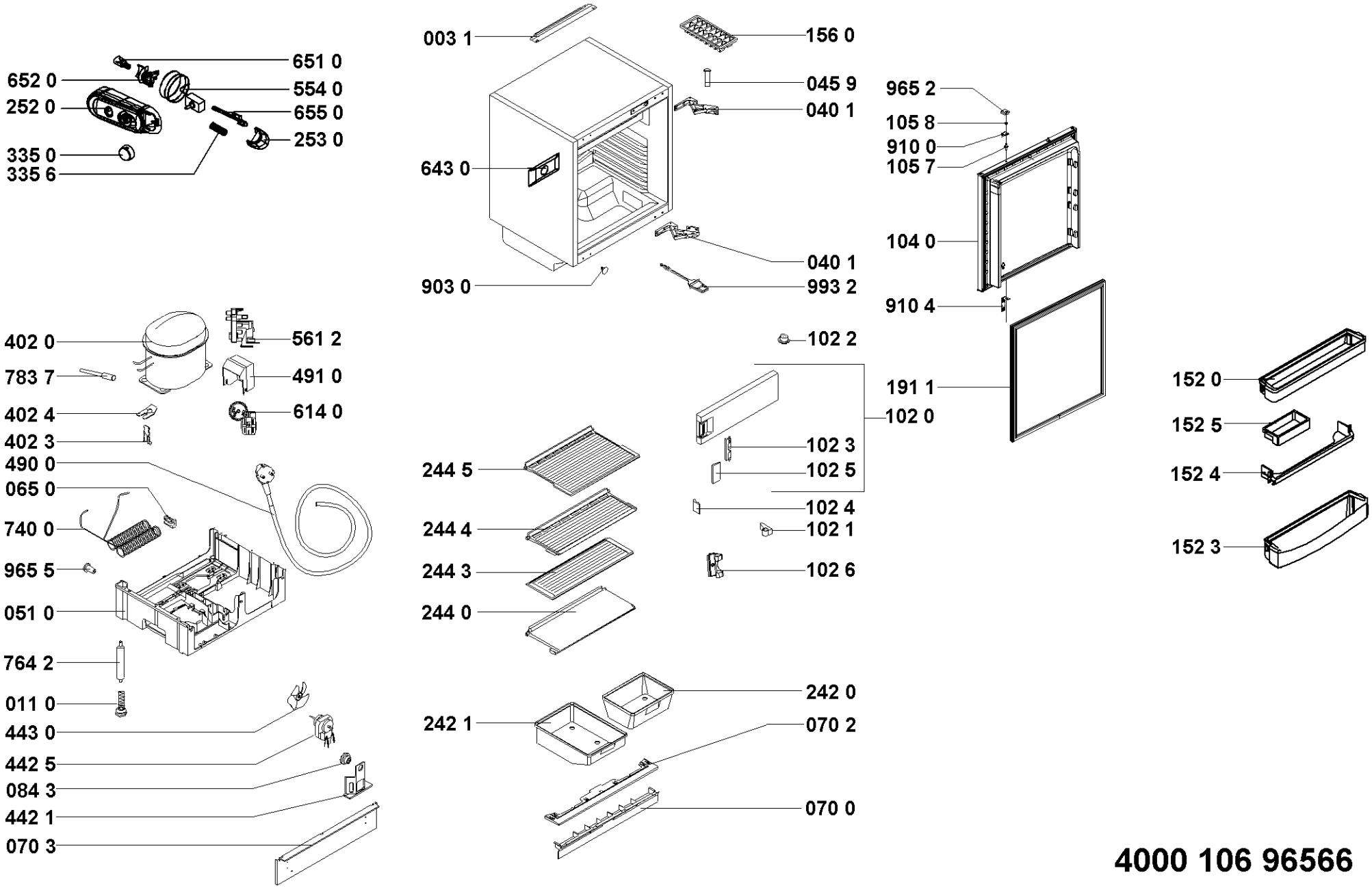

4000 106 96566