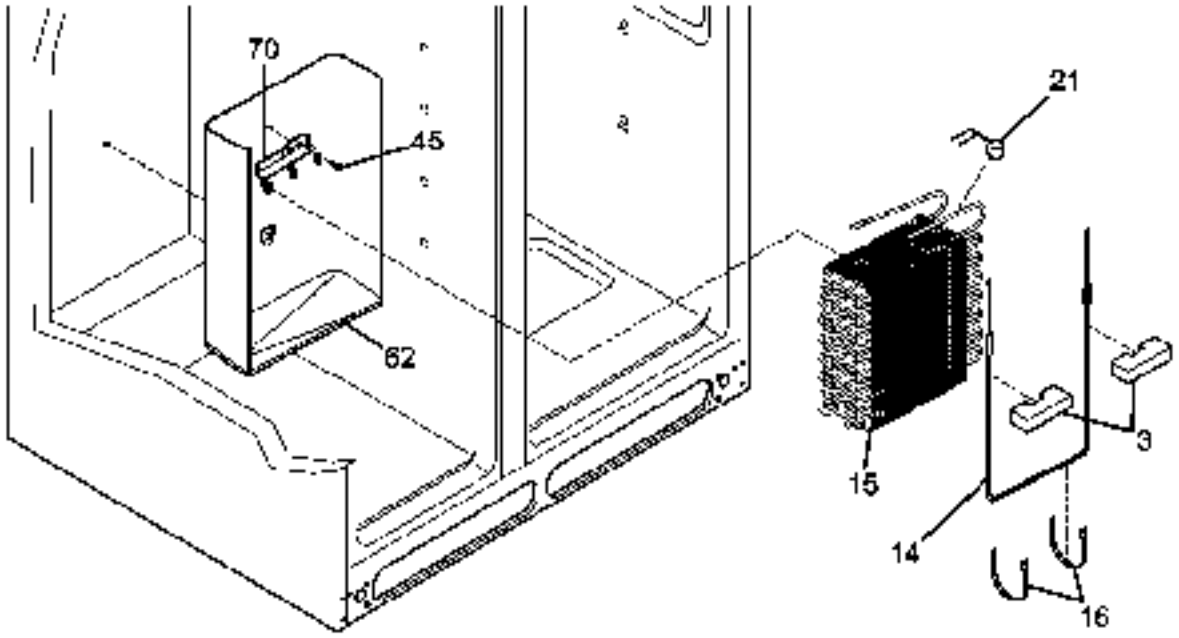

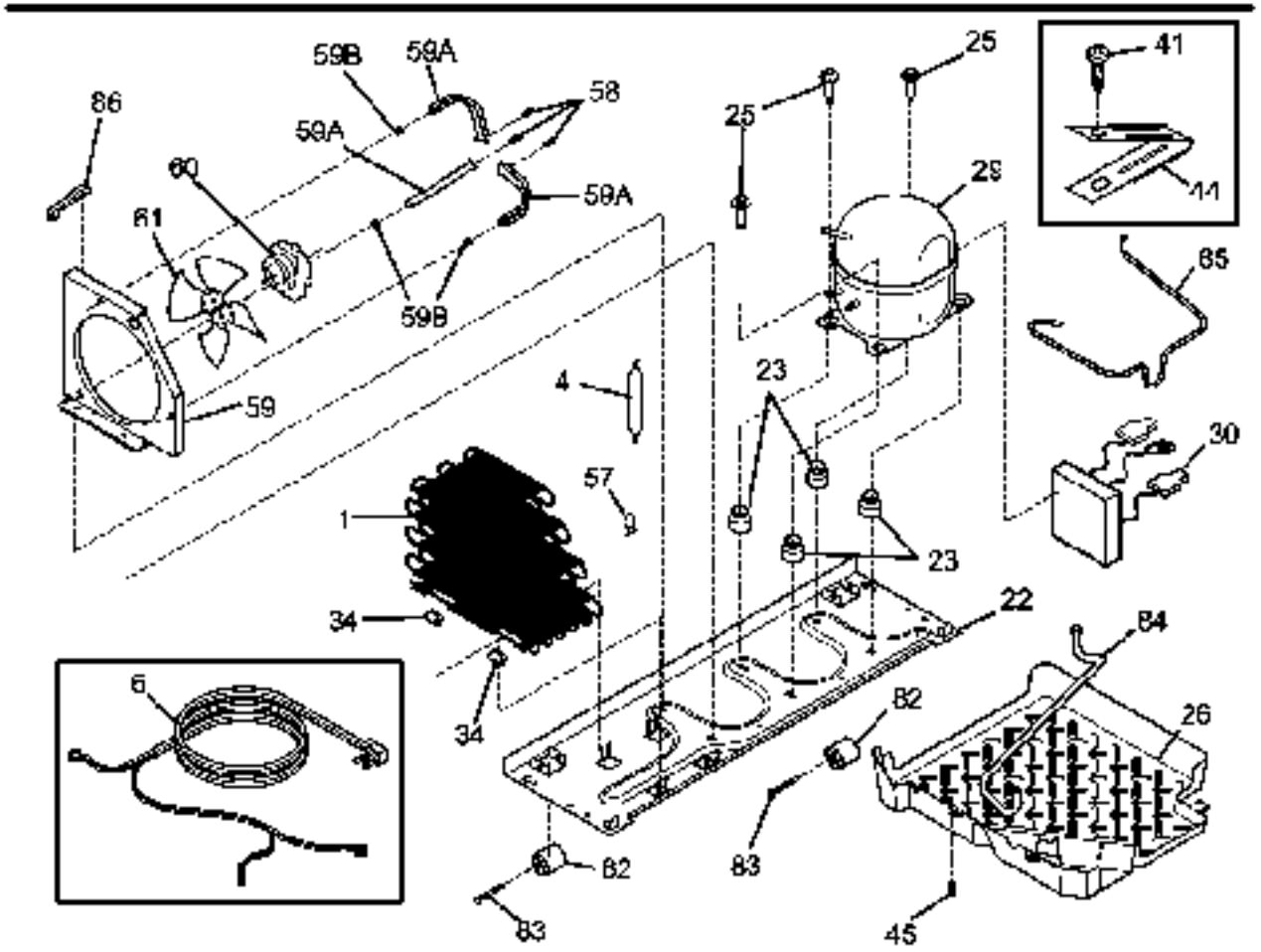

P09253023847