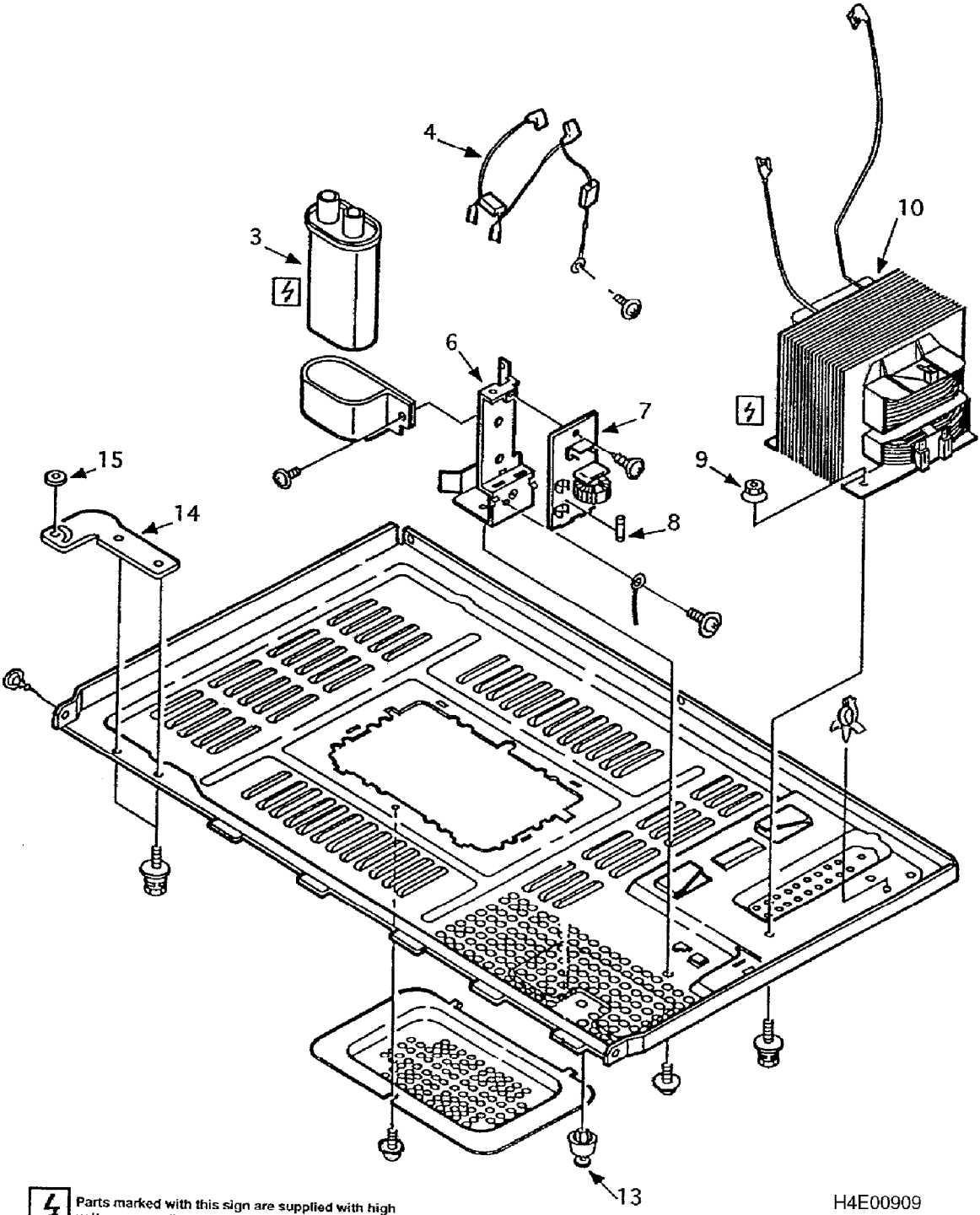

Parts marked with this sign are supplied with high voltage exceeding 250V.