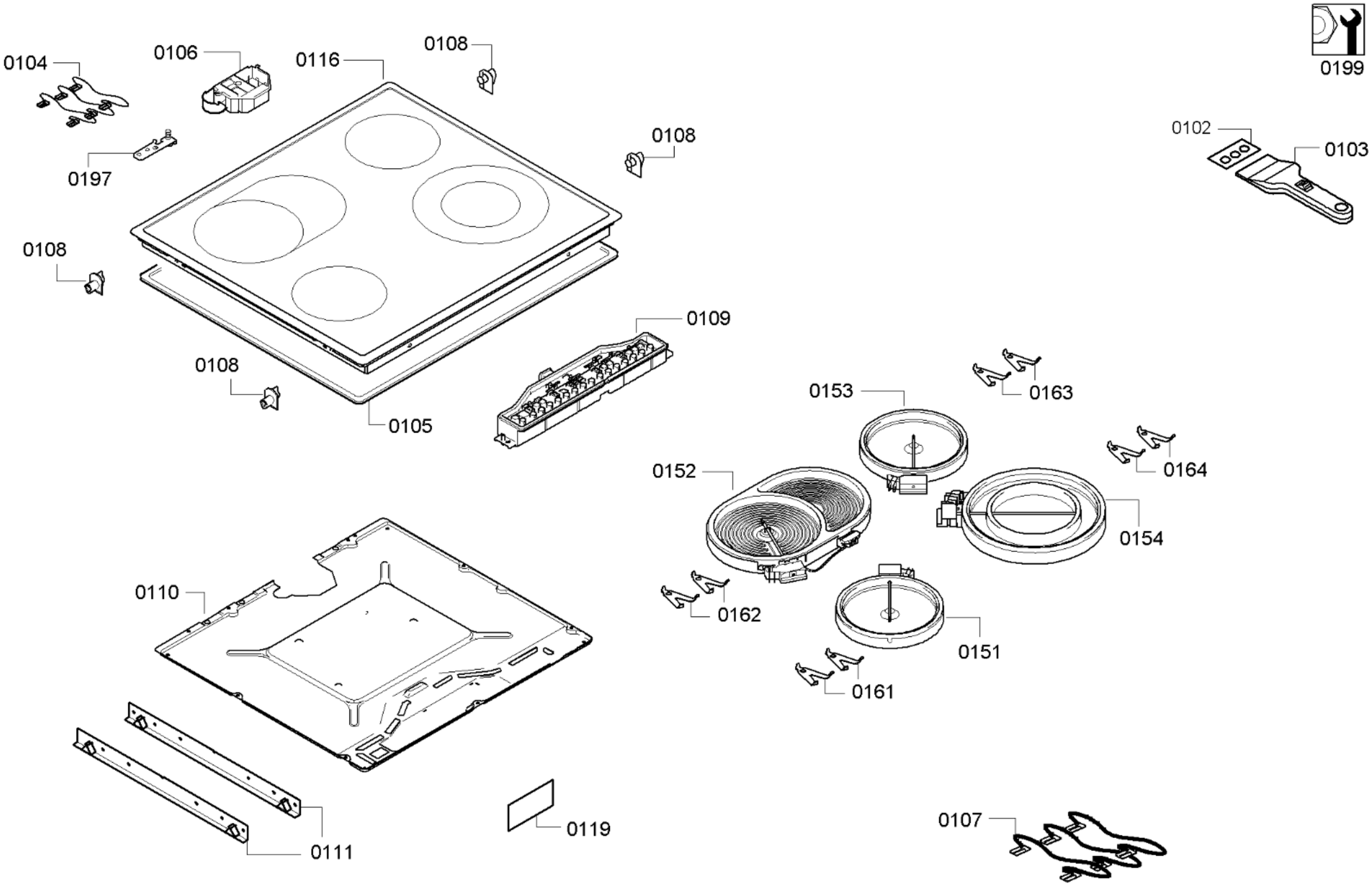

58300000136309 aet 000 a 1/1