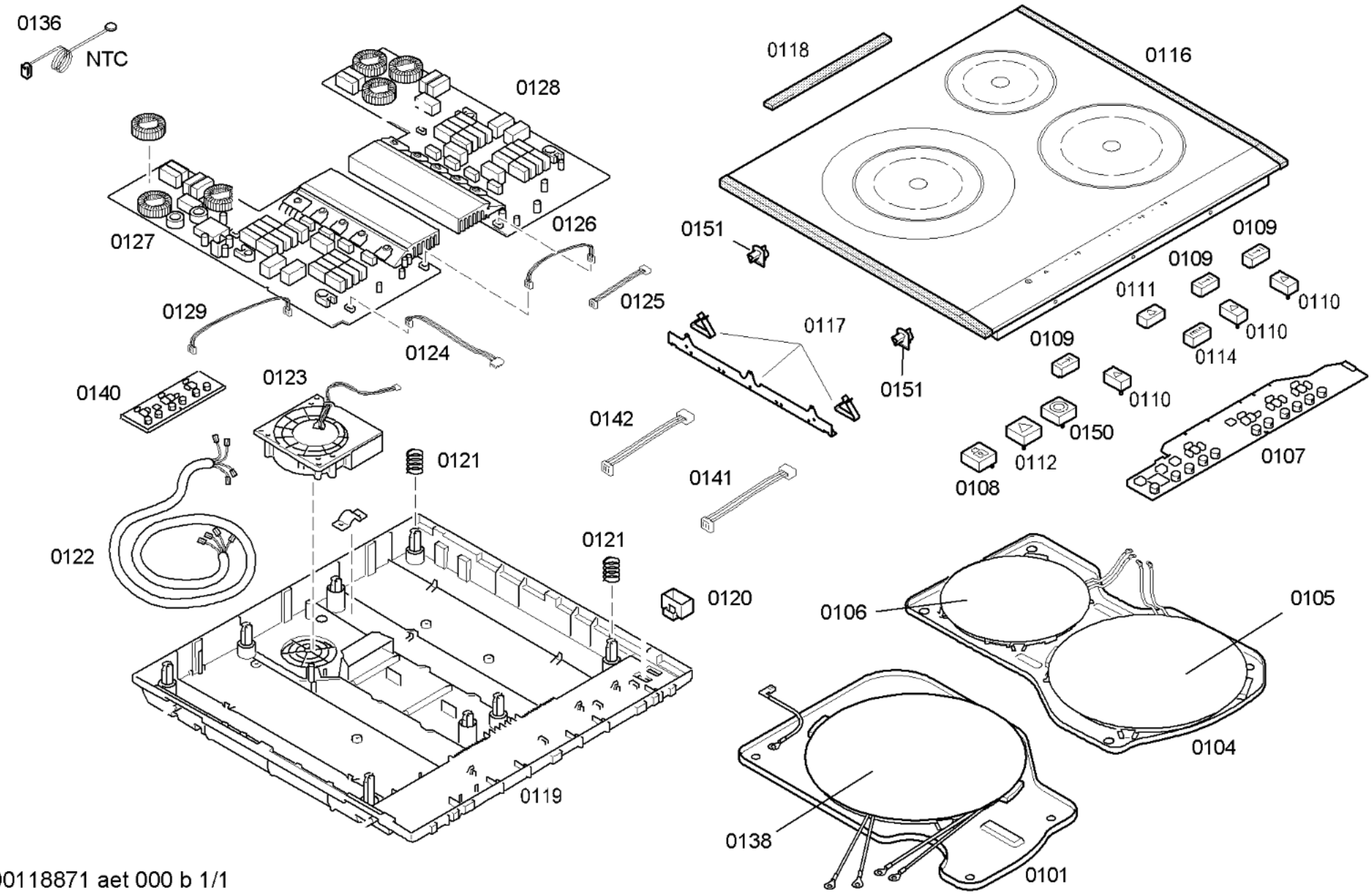

58300000118871 aet 000 b 1/1